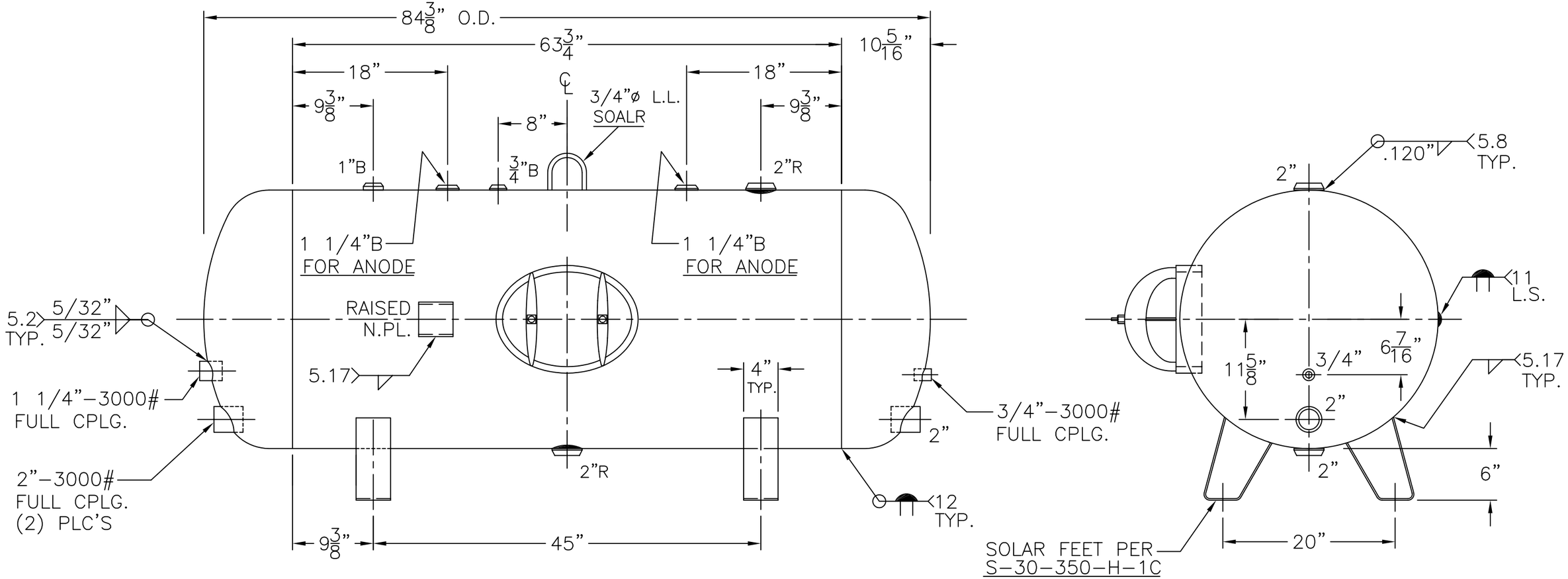

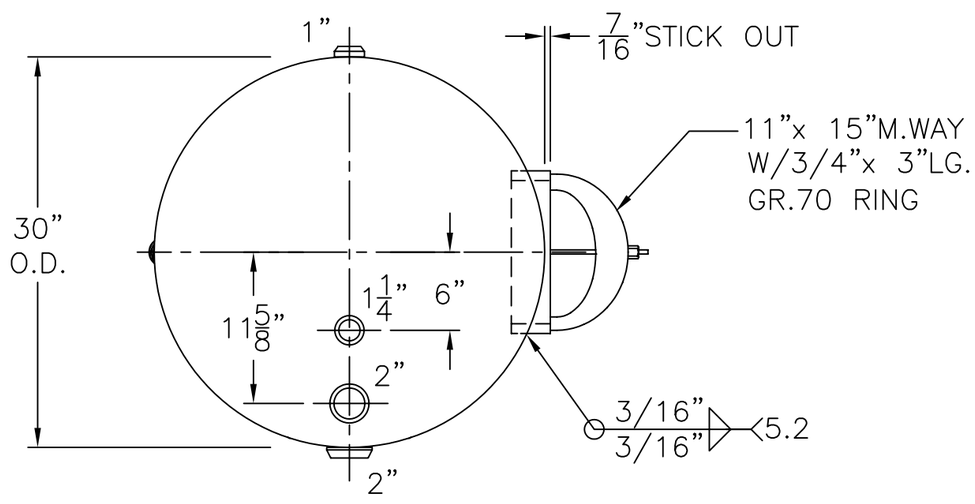

VIEW W/OUT SUPT'S

NOTE: 1) HYDRO @ 240 PSIG.
2) 4-1-04 PROOF TEST.
3) SHIP LOOSE W/(2) 1 5/16" x 24"LG. RIGID MAG. ANODES.

SHELL/ HEADS	.166" SA-414-G 2:1 S.E.	GS-30-235-H	REV. 9-16-04
	JOGGLE		DATE: 5-14-90
		FOR: HANSON STANDARD	
	.165" SA-414-G	HORIZ. HOT WATER TANK	
		SURFACE AREA = 58.0 SQ. FT.	
		INSIDE: GLASS LINED	
M.A.W.P. 160 PSIG. @ 210 °F			
		OUTSIDE: PRIME	
ASME. SECTION IV 2001 ADD 2003		CAD "B"-SIZE UNDER "STD"-SERIE	
X-RAY: RT-NO / H.L.W.		BY: J.G.	SCALE: 1"=12"
GALLONS: 235	WT. 524 LBS.	ROY E. HANSON JR. MFG.	
SERIAL NO.		1924 COMPTON AVE. LOS ANGELES, CA 90011	
N.B.			